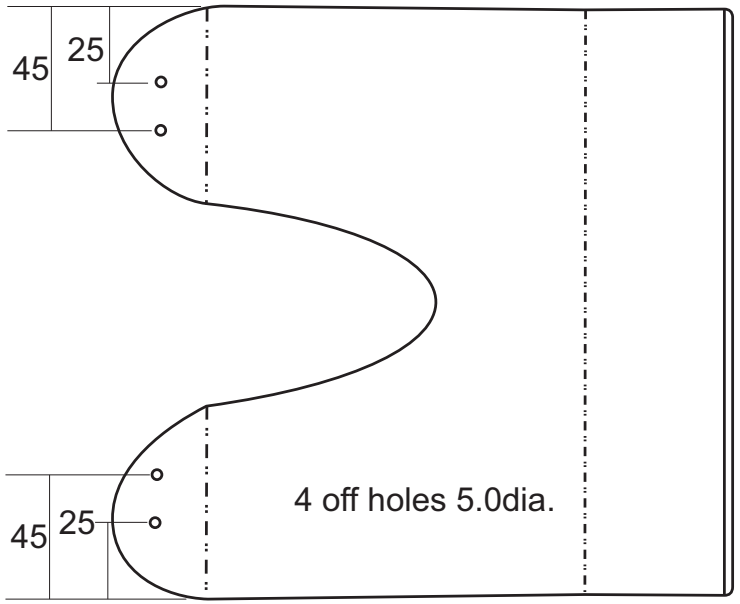

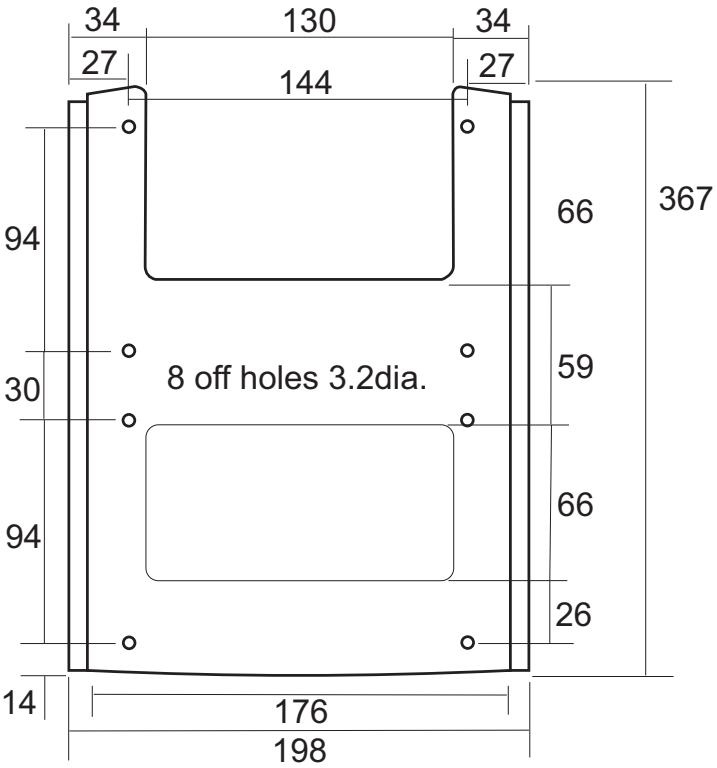

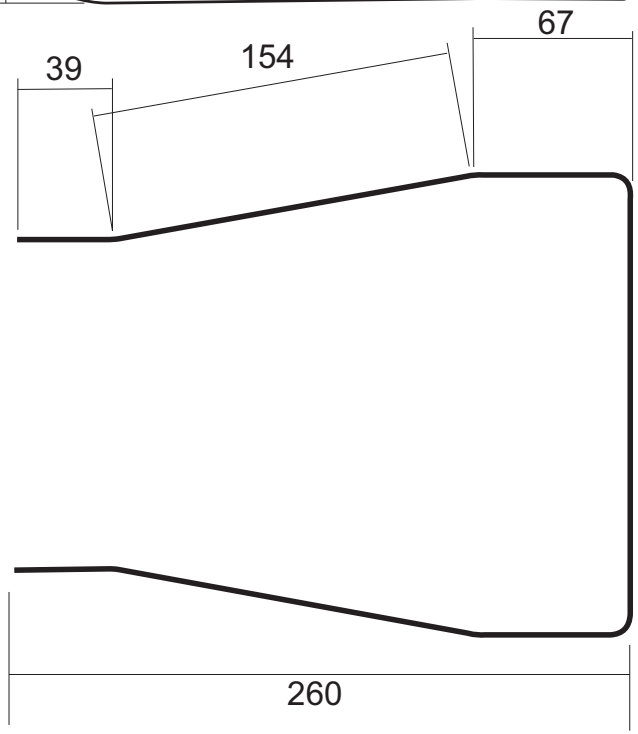

T232 Mast Bracket